Low Cost Heliostat Assembly Kit for High Schools

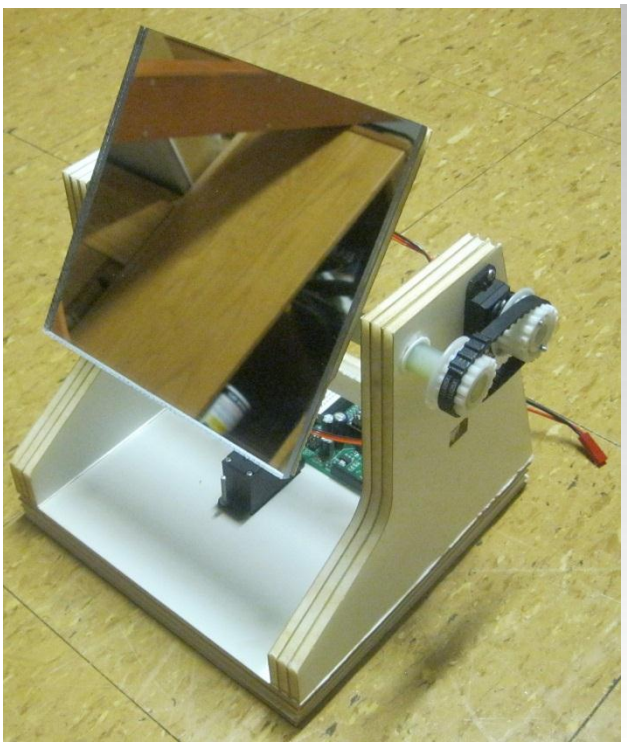

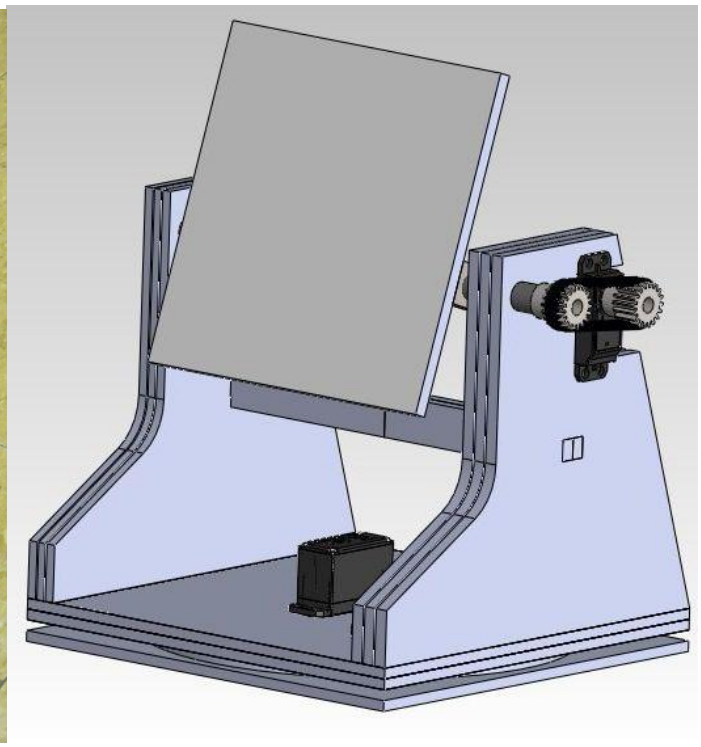

Phillip Daniel

Supervisor: Rockwell International Assistant Professor Alexander Mitsos

Department of Mechanical Engineering

Massachusetts Institute of Technology

06/29/2012

Table of Contents:

Abstract

A servo actuated heliostat kit was designed as a way to give high schools, with few financial resources, a way to expose their students to engineering and renewable energy at a low cost. Each heliostat costs approximately $120 to build, if all of the needed parts are purchased on-line. However, this price decreases if parts are purchased in high volumes, or if the materials are purchased locally. In addition to material costs, a one-time cost of $80 is required to purchase all of the needed tools. Projects such as these, which introduce young students to engineering, are key to increasing the diversity of students in engineering programs nationwide.

Introduction

We aim to introduce young students to engineering and teach them about solar energy, by having them build heliostats as part of their curriculum. There is an effort in engineering to push energy generation away from the use of fossil fuels and towards greener alternatives. One option for greener energy is to use a device called a heliostat, which uses a mirror to direct the sun's light onto a target throughout the day. Such a device can be used for many applications, from concentrating solar energy onto the heat source of a power plant to illuminating areas that are blocked from the sun.

In addition to the number of uses of this technology, there are also a diverse range of structures that have been designed to enable solar tracking. The physical structure of the presented design, as with other heliostat designs, functions to mount a mirror onto two controllable and perpendicular axes. The mechanism will track the sun by using a program that calculates the star's trajectory through the sky, as a function of the time of day and the global position of the heliostat. An Arduino micro-controller will be used to run the program and control the two actuating servo motors.

Design Considerations

To ensure that this project is widely dispersed, considerable effort went into designing the heliostat to be built with common tools and cheap materials. The first design choice was to build the body almost entirely out of foam core, which is rigid, affordable, easy to acquire, and easy to cut. Also, for maximum strength and rigidity, care was taken to design the body so that all of the foam parts are either in tension or compression. This was done to take advantage of foam core's strength in tension and compression, and because the adhesive that was used is more effective at supporting a load in tension than in bending. Additionally, the shaft that is attached to the mirror is powered through a timing belt. This allows an alignment error between the axis of the servo and the mirror. Finally, the servo that was chosen to be used with this design is accurate to within 1 degree. This ensures that sun's light is reliably directed towards the targeted point. These design choices, along with a few other considerations, make the presented structure durable and affordable.

Tools

Note: All of these tools can be purchased at local stores or at the links in the reference section. The total cost of these materials is approximately $80, if they are all purchased online at the given links.

Power Drill

Drill Bits[15]
.1258”, .18”, and .5” Diameter

Straight Edge

Screwdriver Set

Box Cutter

Large Vice Grips

Materials

Note: All of these materials can be purchased at local stores or at the links in the reference section. The total cost of these materials is approximately $120, if they are all purchased online at the given links.

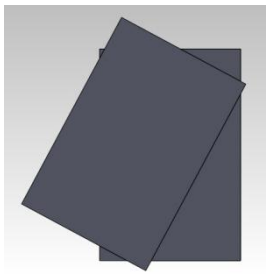

Foam Core
(20” X 30”, ~.2in thick)

Rod
9.5” Long by 1/2” Diameter

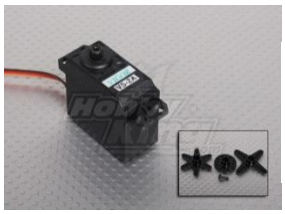

Vigor VS-2A
Servo
(39.2g/5kg/0.17 sec)

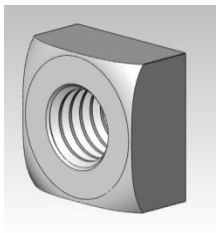

Square Nut
(7/16” -14 Thread Size, 3/8” Thick)

Tape

Timing-Belt Pulleys (2), 1” OD

Templates

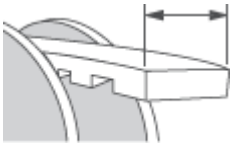

Timing-Belt 10”

Washers

Krazy Glue

Mirrored Acrylic Sheet (6” X

Krazy Glue Gel

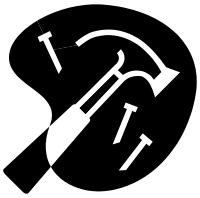

1 ½” Nails

4 Machine Screws
(M5, 25mm long)
4 Machine Screws
(M5, 14mm)
8 Nuts (M5)

2 Nuts (4-40)

Directions

(Follow the drying times suggested by your glue's manufacturer)

Step 1:

Print the templates at the end of this document.

> Note: These have to be printed in full scale. Compare the printouts with the PDFs, to ensure that your printer has not changed the scale.

Step 2:

Secure the templates to the poster board as shown in Figure 1 and, using the center lines as guides, drill the .18 inch and .5inch holes.

> Note: Drill the .5 inch holes with the .18inch drill bit first for increased accuracy.

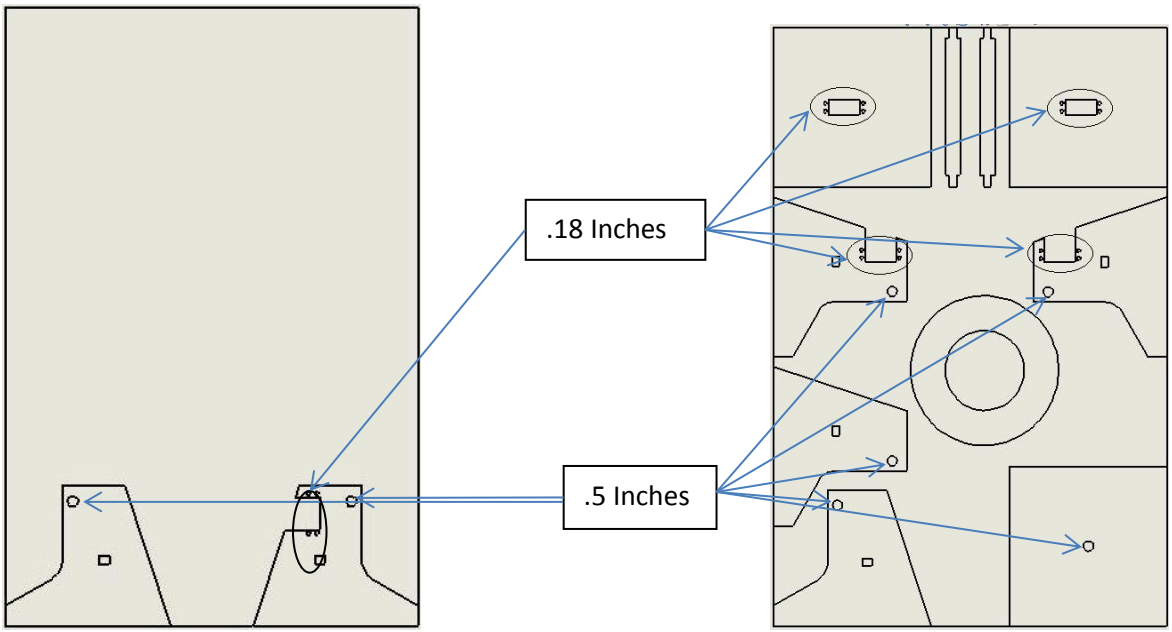

Figure 1: This shows how the templates should be arranged on the poster board.

Step 3:

With a sharp box cutter, cut out the individual components.

> Note: Cut the foam core with multiple passes of the box cutter. Don't try to cut through the whole sheet at once.

Step 4:

Glue the matching cutouts together as shown in Figure 2, using the super glue. You should be able to look through the cutouts and see that all of the holes are somewhat aligned, the base of parts 1 and 2 should be flat, and one template on part 3 should be facing out.

> Note: After applying glue to one surface, join the parts and press them together for 30 seconds. Then, allow the glue to set for five minutes.

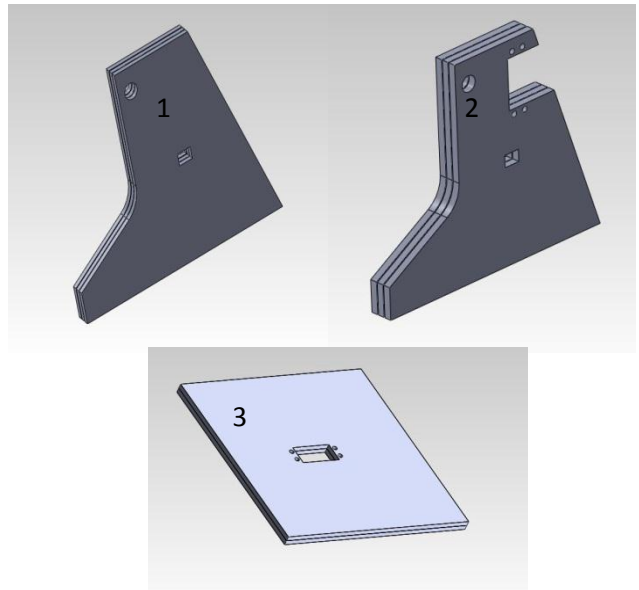

Figure 2: This is how the parts should look after they have been glued together.

Step 5:

Using the superglue gel, glue parts 1, 2 and 3 together as shown in Figure 3. Be sure that the parts are arranged so that the .5" diameter holes are closest to the section of the base that is labeled short, also be sure that the template on the base is facing down/out. Allow the glue to set for five minutes. After the glue has set, insert 3 nails through the base and each of the uprights for added support.

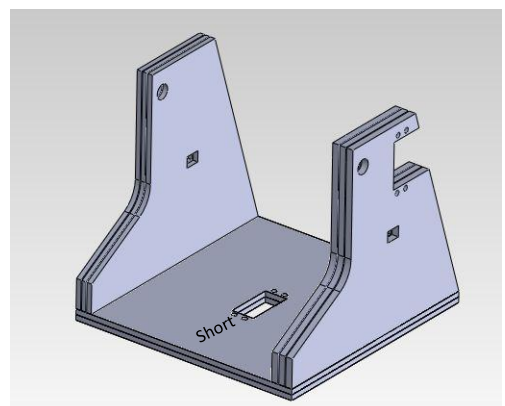

Figure 3: This how the heliostat should be arranged at the end of step 5.

Step 6:

Cut through the top layer of both cross beams and insert them into the heliostat as shown in Figure 4. Apply superglue gel to joints between the cross beams and the walls of the heliostat, and the surface shared between the two cross beams, as indicated in blue. Allow the glue to set for five minutes.

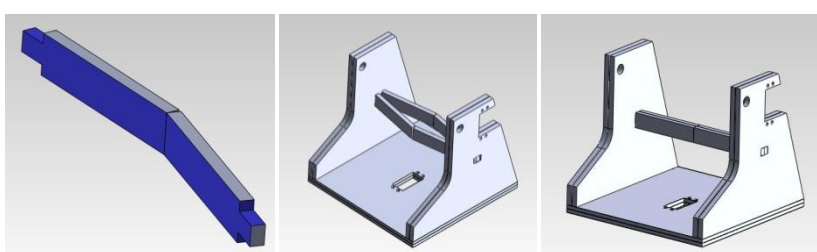

Figure 4: This shows where to apply the glue to the cross beams and how to insert them into the walls of the heliostat.

Step 7:

Place a piece of tape along the cuts, as shown in Figure 5.

Figure 5: This shows where to place the tape on the cross beams to keep them from flexing.

Step 8:

Superglue the spacer to the base, by lining it up with the template as shown in Figure 6, and allow the glue to set for five minutes.

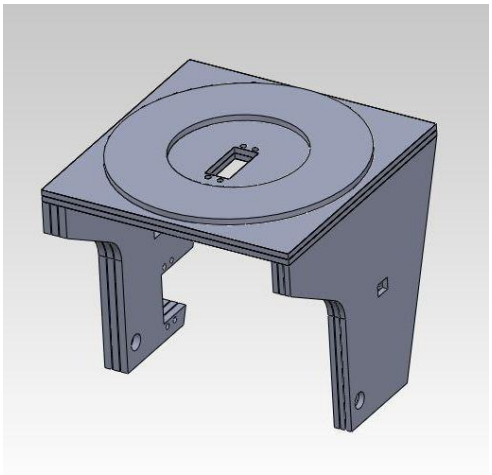

Figure 6: This shows the arrangement of the spacer on the heliostat.

Step 9:

Center the largest servo horn onto the bottom base and secure it with the superglue, as shown in Figure 7. Allow the glue to set for five minutes.

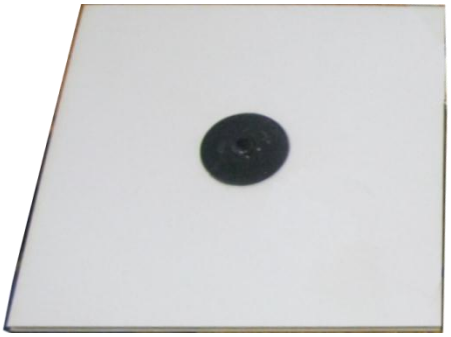

Figure 7: This is how the servo horn should be arranged on the bottom base.

Step 10:

Bore out one of the timing belt-pulleys to a .5” diameter hole using the .5 inch drill bit, and check that it fits snuggly onto the .5” diameter shaft.

Step 11:

Carefully bore out two square nuts to .5” diameter holes and check that they fit snuggly onto the shaft.

> Note: Have somebody hold the nut with a pair of vice grips and, if possible, progressively increase the diameter of the hole with multiple bits until a .5” diameter hole is left. Otherwise, plunge the drill bit into the nut slowly.

Step 12:

Attach a servo horn to the unaltered timing belt pulley as shown here, being careful to center the servo horn’s axis with the pulley’s, as shown in Figure 8.

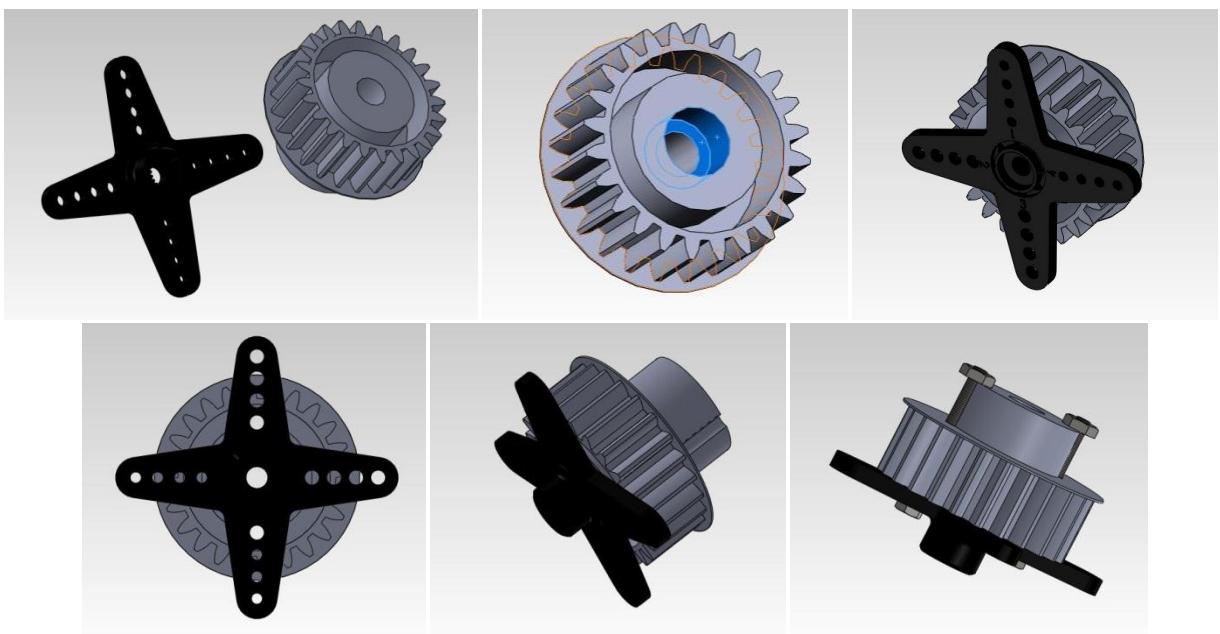

Figure 8: This shows the steps for how to attach the servo horn to the timing belt pulley. First, select a servo horn that is approximately the same size as the pulley. Then, increase the diameter of the pulley’s central axis to .3” with the drill, to at least .2” deep. Press the extended end of the servo horn into the pulley. Next, drill through two opposing holes in the servo horn, and drill through the pulley as well, being sure not to drill through its teeth. Now, turn the servo horn around and line up the two holes that were just drilled. Finally, insert two 1.5” long, 4-40 screws through the horn and the pulley and attach them together with nuts.

Step 13:

Assemble the shaft and servo, with no glue, and align the two timing belt pulleys as shown in Figure 9. Some of the rod should be exposed from the wall opposite the pulley.

Note: Screw the servo into the uprights, being careful not to force the screws through the foam core, and screw the servo horn into the servo's shaft.

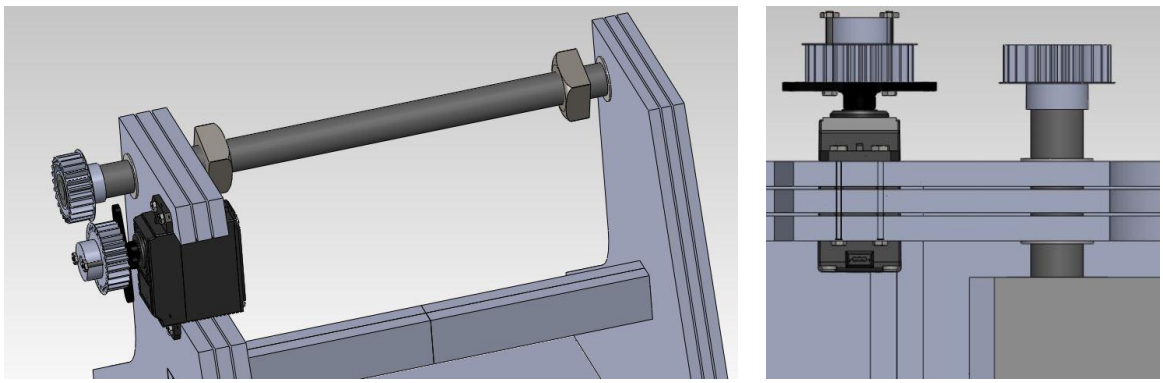

Figure 9: These images show how to assemble the shaft and servo (left), and align the pullies (right).

Step 14:

Once the shaft's pulley is aligned with the servo's pulley, glue the outside set of nylon washers to the walls and the inside set of washers to the shaft, using the superglue gel. Also, glue the pulley to the shaft using the super glue. Let the glue set for five minutes.

Step 15:

Shorten the timing belt to the correct length, leaving around 7.2 inches, and use the superglue gel to make a loop that connects the shaft's pulley to the servo's pulley, as seen in Figure 10. Once you are sure that the belt fits around both of the components, place it to the side for later.

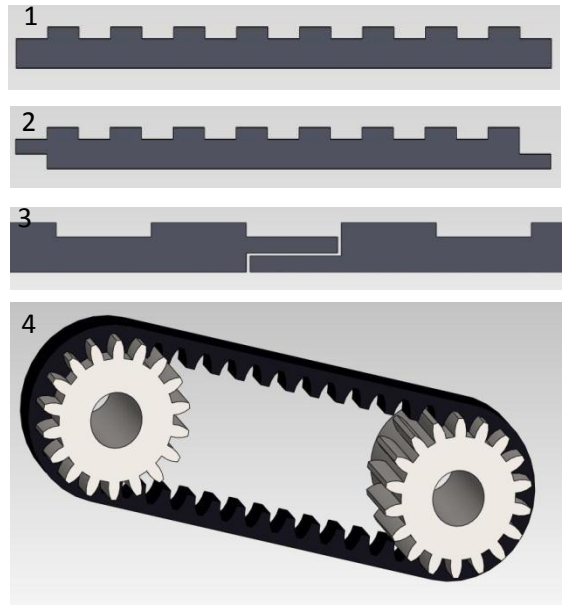

Figure 10: This shows the steps for making a belt of the correct length. The length is determined by wraping the belt around both pullies and taking out the slack. Now, cut the belt just after the teeth on both ends, as shown in 2. Using a box cutter, shave off the top half on one end and the bottom half on the other end, as shown in 3. Finally, bring both ends together and secure them with super glue gel, as shown in 4. The final belt should fit snuggly around both of the pullies.

Step 16:

Glue the mirror template onto the back of the mirror, or draw the guide line by hand. Then, using the line as a guide, glue the square washers to the mirror with the super glue gel.

Note: The bottom edge of the square washers should be aligned with the dotted line on the template, and the nuts should be aligned with the outside edges of the mirror.

Step 17:

Center the mirror on the shaft and make sure that it is able to rotate approximately 180° from facing straight up to facing straight down, without interfering with the cross beams. Then glue the square washers to the shaft using the superglue gel, as seen in Figure 11.

Step 18:

Install the final servo, secure the bottom base to the final servo with a screw, and install the timing belt onto the pulleys to complete the heliostat. This is seen in Figure 12.

Purchasing Links

Foam core: http://www.amazon.com/Elmers-Acid-Free-Boards-16-Inch-902015/dp/B003NS4HQY/ref=sr_1_4?s=office-products&ie=UTF8&qid=1340998492&sr=1-4&keywords=20x30+foam+core

Rod: http://www.mcmaster.com/#cast-acrylic/=i6zw7m (Part Number: 8528K32)

Box cutter: http://www.amazon.com/IRWIN-2082300-Utility-Standard-Retractable/dp/B0001Q2EOS/ref=sr_1_2?ie=UTF8&qid=1340619344&sr=8-2&keywords=box+cutter

Servo: http://www.hobbyking.com/hobbyking/store/__16641__Vigor_VS_2A_Servo_39_2g_5kg_0_17sec.html

Tape: http://www.amazon.com/Henkel-00-20843-4-Inch---500-Inch-Invisible/dp/B000NHZ3IY/ref=sr_1_1?s=hi&ie=UTF8&qid=1340619520&sr=1-1&keywords=invisible+tape

Templates: Print the pages at the end of this document. Paper can be purchased online at: http://www.amazon.com/Inches-Letter-Bright-Sheets-998067R/dp/B004WL0L9S/ref=sr_1_1?ie=UTF8&qid=1340864035&sr=8-1&keywords=paper

Square nut: http://www.mcmaster.com/#machine-screw-square-nuts/=hflvij (Part Number: 98694A125)

Super glue: http://www.amazon.com/Krazy-Glue-KG92548R-Instant-0-18-Ounce/dp/B000BQSFSM/ref=sr_1_2?ie=UTF8&qid=1340861717&sr=8-2&keywords=Krazy+Glue

Super glue gel: http://www.amazon.com/Krazy-Glue-KG86648R-Instant-0-07-Ounce/dp/B000H5SFNW/ref=sr_1_4?ie=UTF8&qid=1340863003&sr=8-4&keywords=all+purpose+instant+krazy+glue

Straight Edge: http://www.amazon.com/The-Classics-12-Inch-Stainless-TPG-152/dp/B002IXKD9U/ref=sr_1_1?ie=UTF8&qid=1340863091&sr=8-1&keywords=ruler

Power Drill: http://www.amazon.com/Black-Decker-9099KC-7-2-Volt-Cordless/dp/B0002TXNX0/ref=sr_1_1?ie=UTF8&qid=1340863181&sr=8-1&keywords=power+drill

Screws: http://www.mcmaster.com/#machine-screw-fasteners/=i65kg1

10, 25mm M5 screws (Part Number: 90116A262)

50, 14mm M5 screws (Part Number: 92000A324)

100, 25.4mm 4-40 screws (Part Number: 90272A115)

Nuts: http://www.mcmaster.com/#hex-nuts/=i70fwd

100, 4-40 Nuts (Part Number: 90480A005)

100, M5 Nuts (Part Number: 90695A037)

Mirror: http://www.mcmaster.com/#catalog/118/3571/=i705h8 (Part Number: 1518T18)

Screwdriver Set: http://www.amazon.com/Stanley-66-052-6-Piece-Precision-Screwdriver/dp/B00009OYGV/ref=sr_1_5?s=hi&ie=UTF8&qid=1340863503&sr=1-5&keywords=screwdriver+set

2 Timing-Belt Pulleys: https://sdp-si.com/eStore/Direct.asp?GroupID=218 (Part Number: A 6M16-040DF25)

Timing-Belt: http://www.mcmaster.com/#timing-belts/=i723l2 (Part Number: 1679K619)

Drill Bits: http://www.amazon.com/Bosch-TI18-18-Piece-Titanium-Assortment/dp/B0000TZZWE/ref=sr_1_6?s=hi&ie=UTF8&qid=1340874037&sr=1-6&keywords=drill+bits

Washers: http://www.mcmaster.com/#catalog/118/3226/=hzc366 (Part Number: 95630A246)

Large Vice Grips: http://www.amazon.com/7-Inch-Curved-Locking-Pliers-Cutter/dp/B00004YO5L/ref=sr_1_10?ie=UTF8&qid=1340863806&sr=8-10&keywords=vise+grips

Nails: http://www.mcmaster.com/#standard-nails/=i708x6 (Part Number: 97850A228)

Templates

Spacer

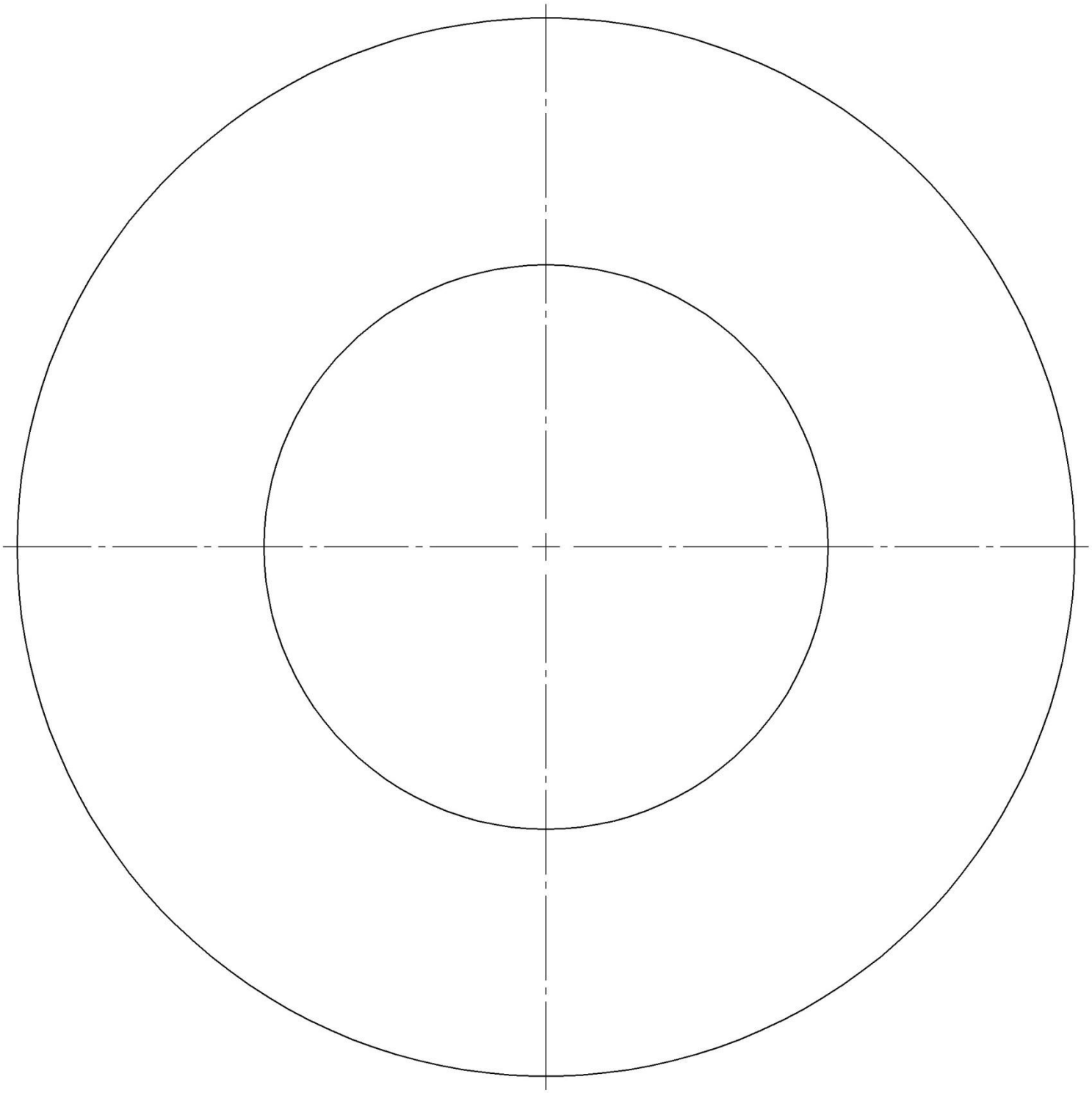

Base

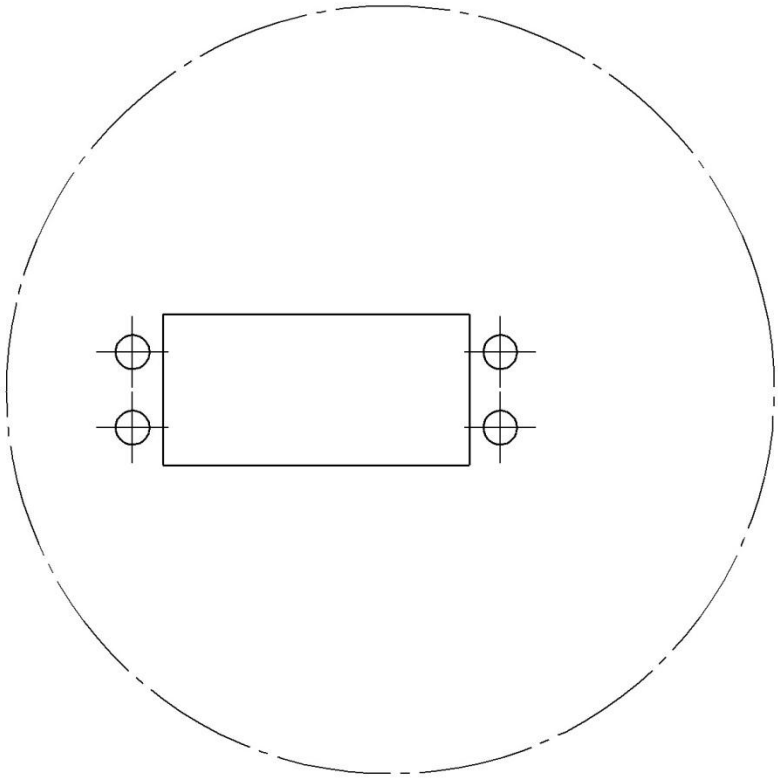

Base

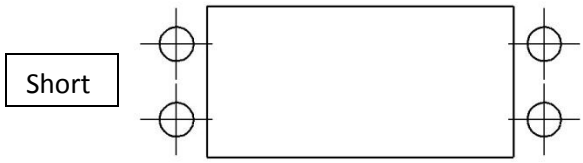

Bottom

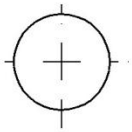

Mirror

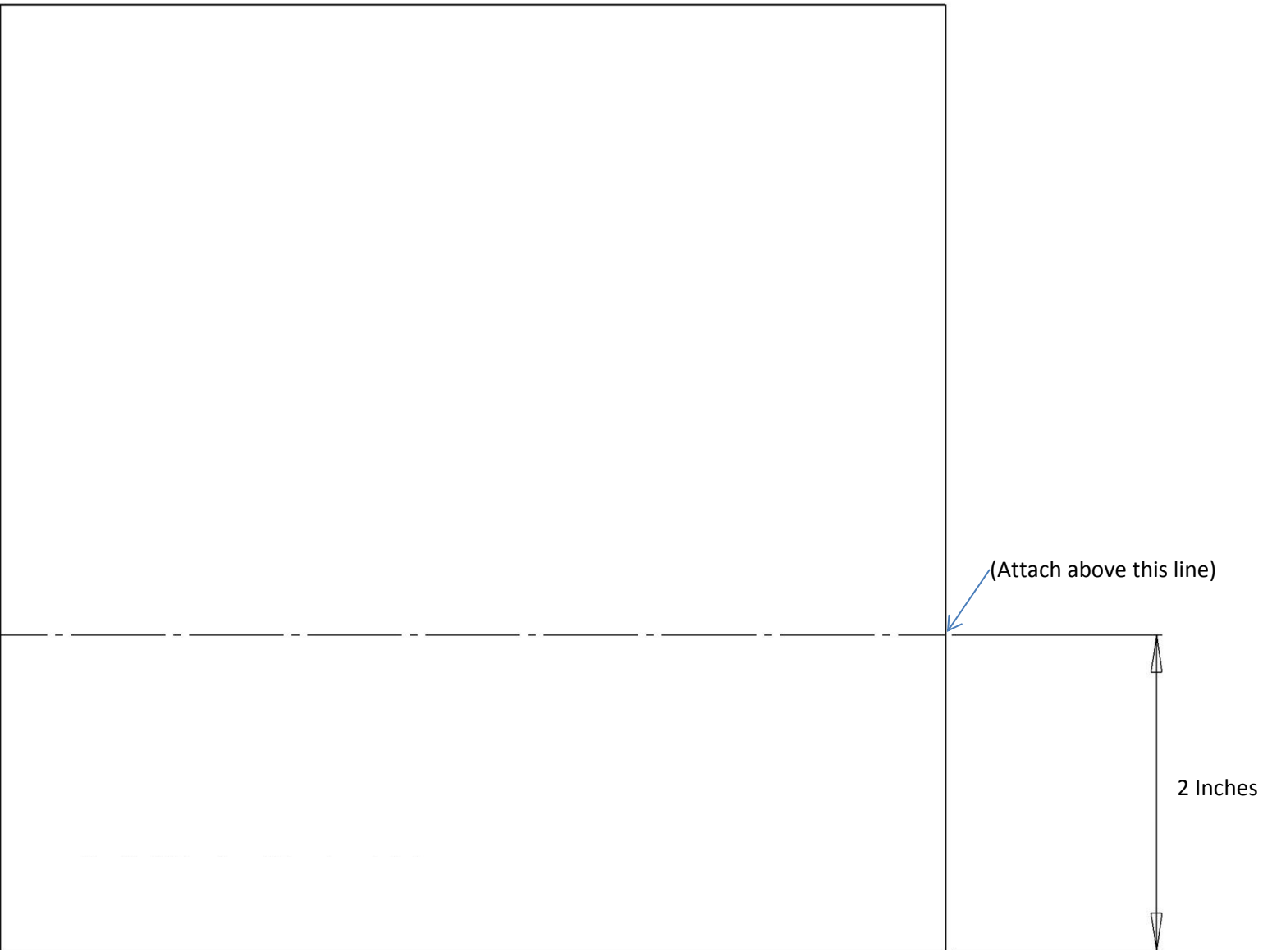

Wall (Print 3 copies of this page)

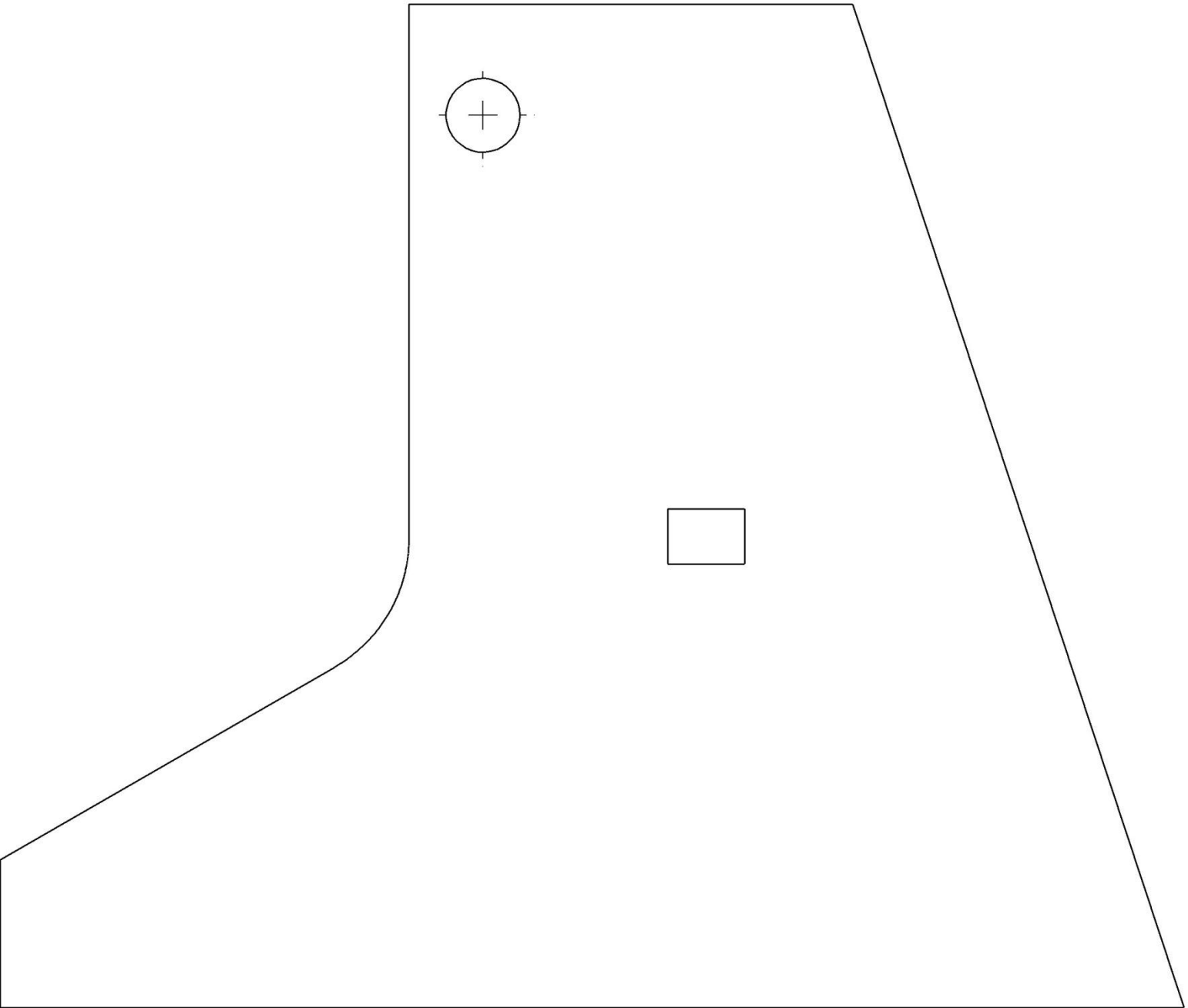

Wall (Print 3 copies of this page)

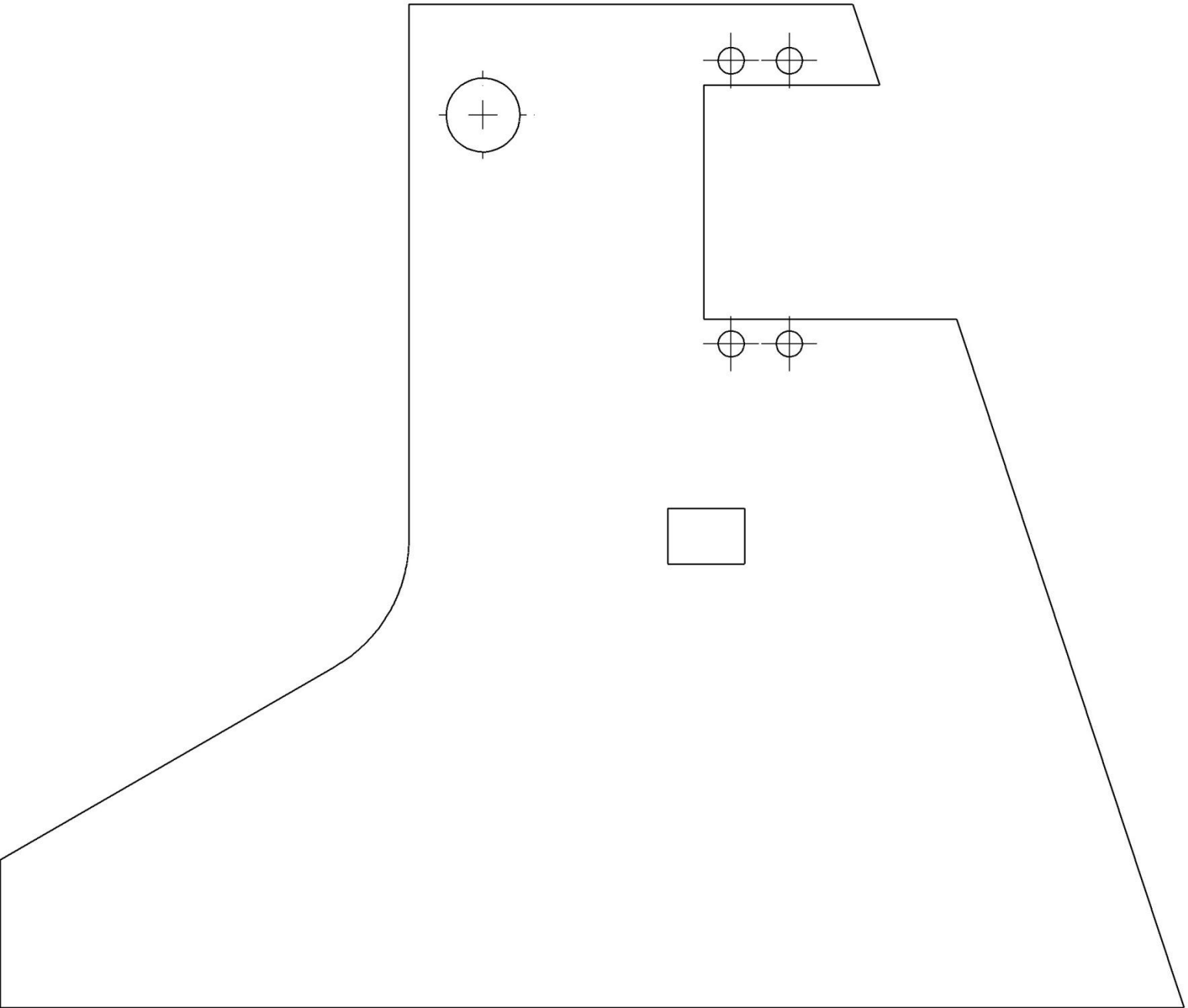

Cut here

Cross Beams

Cut here